# Chapter 9: Some applications to Trigonometry

**2016**

## Very Short Answer Type Questions [1 Mark]

**Question 1.**
If Figure, AB is a 6 m high pole and CD is a ladder inclined at an angle of 60° to the horizontal and reaches up to a point D of the pole. If AD = 2.54 m, find the length of the ladder. (use √3=1.73)

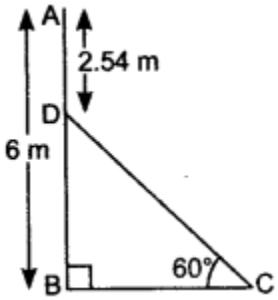


**Solution:**

$$BD = AB - AD$$
$$= 6\text{ m} - 2.54\text{ m} = 3.46\text{ m}$$

In $\Delta DBC$, $\frac{BD}{CD} = \sin 60°$

$\Rightarrow$ $\frac{3.46}{CD} = \frac{\sqrt{3}}{2}$

$\Rightarrow$ $CD = \frac{2 \times 3.46}{\sqrt{3}} = \frac{2 \times 3.46}{1.73} = 2 \times 2 = 4\text{ m}$

Hence, length of the ladder is 4 m.

**Question 2.**
A ladder, leaning against a wall, makes an angle of 60° with the horizontal. If the foot of the ladder is 2.5 m away from the wall, find the length of the ladder.
**Solution:**
Let AC be the ladder of length $x$.

In $\Delta ABC$, $\frac{BC}{x} = \cos 60°$

$\Rightarrow$ $\frac{2.5}{x} = \frac{1}{2}$

$\Rightarrow$ $x = 2 \times 2.5 = 5\text{ m}$

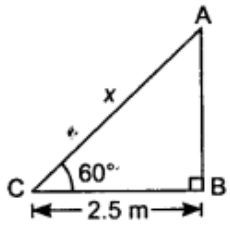


Thus, length of the ladder is 5 m.

**Question 3.**
An observer, 1.7 m tall, is 20√3 m away from a tower. The angle of elevation from the eye of the observer to the top of the tower is 30°. Find the height of the tower.

**Solution:**

Let CD be the tower of height $h$.

In $\Delta DEA$, $\frac{DE}{AE} = \tan 30°$

$\Rightarrow \frac{h-1.7}{20\sqrt{3}} = \frac{1}{\sqrt{3}}$

$\Rightarrow h - 1.7 = 20$

$\Rightarrow h = 20 + 1.7 = 21.7$ m

So, height of tower is 21.7 m.

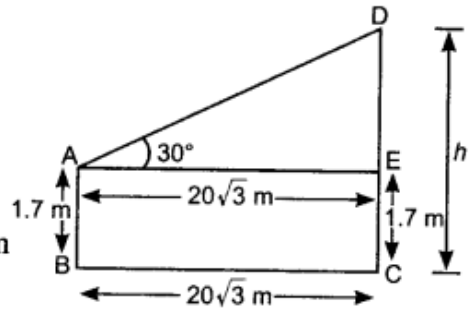


## Short Answer Type Questions II [3 Marks]

**Question 4.**
The angles of depression of the top and bottom of a 50 m high building from the top of a tower are 45° and 60° respectively. Find the height of the tower and the horizontal distance between the tower and the building,

**Solution:**

Let CD is the building of height 50 m and AB be the tower.

Let horizontal distance between the tower and building is BC is $x$ metre.

$\because$ BCDE is a rectangle

So, ED = BC and BE = CD

Also, ED = $x$ and BE = 50 m

Let AE = $y$

Now, in $\Delta AED$, $\frac{y}{x} = \tan 45° \Rightarrow \frac{y}{x} = 1$

$\Rightarrow y = x$ ...(i)

Now, in $\Delta ABC$, $\frac{AB}{BC} = \tan 60°$

$\Rightarrow \frac{AE + EB}{BC} = \sqrt{3} \Rightarrow \frac{y+50}{x} = \sqrt{3}$

$\Rightarrow x + 50 = \sqrt{3}x$ [$\because y = x$, using(i)]

$\Rightarrow \sqrt{3}x - x = 50$

$\Rightarrow (\sqrt{3} - 1)x = 50$

$\Rightarrow x = \frac{50}{\sqrt{3} - 1}$

$\Rightarrow x = \frac{50(\sqrt{3}+1)}{(\sqrt{3}-1)(\sqrt{3}+1)} = \frac{50(\sqrt{3}+1)}{3-1} = \frac{50(\sqrt{3}+1)}{2}$

$\Rightarrow x = 25(\sqrt{3}+1) = 25(1.73 + 1) = 25 \times 2.73 = 68.25$ m

$\therefore$ Height of the tower $= 50 + y = 50 + 68.25$ ($\because x = y$)

$= 118.25$ m

Horizontal distance between the tower and the building $= x = 68.25$ m.

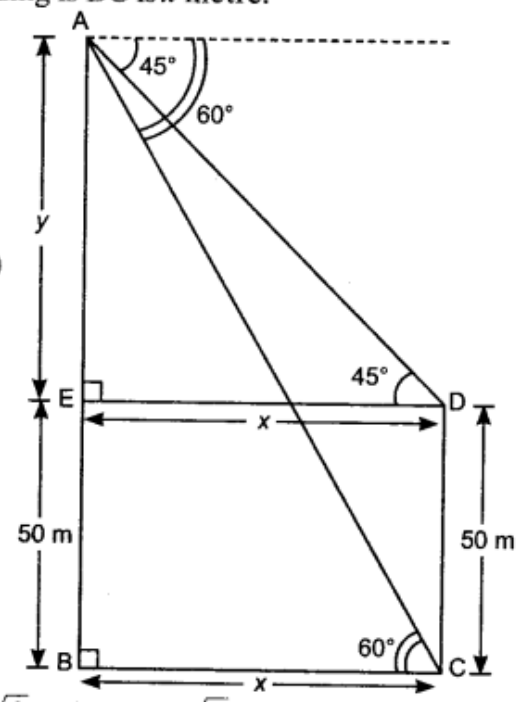


**Question 5.**
A man standing on the deck of a ship, which is 10 m above water level, observes the

angle of elevation of the top of a hill as 60° and the angle of depression of the base of the hill as 30°. Find the distance of the hill from the ship and the height of the hill.

**Solution:**

Let AB be the water level, DA be the height of ship = 10 m.

Let BC be the hill of height $h$ from water level.

Let AB = $x$

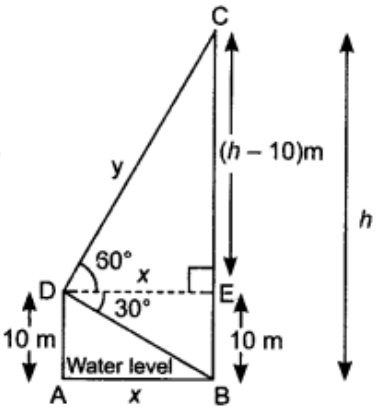


In $\Delta DEB$, $\frac{BE}{DE} = \tan 30° \Rightarrow \frac{10}{x} = \frac{1}{\sqrt{3}}$

$\Rightarrow$ $x = 10\sqrt{3}$ m ...(i)

Now, in $\Delta CED$, $\frac{CE}{x} = \tan 60°$

$\Rightarrow$ $\frac{h-10}{10\sqrt{3}} = \sqrt{3}$ [From (i)]

$\Rightarrow$ $h - 10 = 30$

$\Rightarrow$ $h = 40$ m

So, distance of hill from ship = $10\sqrt{3}$ m and the height of the hill = 40 m.

**Question 6.**

Two men on either side of a 75 m high building and the thewthe ith base of the building observe the angles of elevation of the top of the building as 30° and 60°. Find the distance between the two men

**Solution:**

Let C and D be the positions of two men.

Let CB = $y$ and BD = $x$

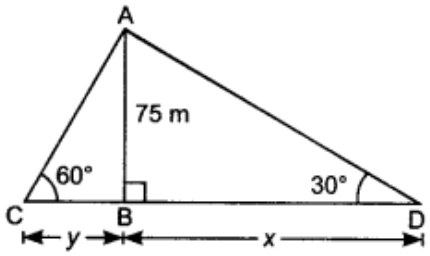


In $\Delta ABC$, $\frac{AB}{BC} = \tan 60°$

$\Rightarrow$ $\frac{75}{y} = \sqrt{3}$

$\Rightarrow$ $y = \frac{75}{\sqrt{3}} = \frac{75\sqrt{3}}{3} = 15\sqrt{3}$ m

$= 15 \times 1.73 = 25.95$ m

Now, in $\Delta ABD$, $\tan 30° = \frac{75}{x} \Rightarrow \frac{1}{\sqrt{3}} = \frac{75}{x} \Rightarrow x = 75\sqrt{3} \Rightarrow 75 \times 1.73 = 129.75$ m

Hence, distance between two men is $x + y = 129.75 + 25.95 = 155.7$ m

**Question 7.**

A 7 m long flagstaff is fixed on the top of a tower standing on the horizontal plane. From a point on the ground, the angles of elevation of the top and bottom of the flagstaff are 60° and 45° respectively. Find the height of the tower correct to one place of decimal

Let AB is the tower of height $h$ and DA is the flagstaff of height 7 m and BC is $x$.

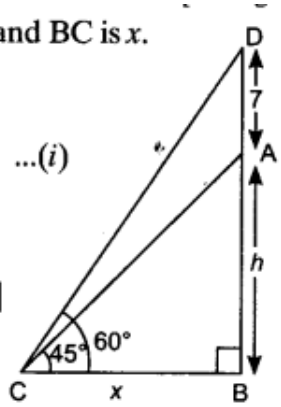


In $\Delta ABC$, $\frac{AB}{BC} = \tan 45°$

$\Rightarrow \frac{h}{x} = 1 \Rightarrow h = x$ ...(i)

Now, in $\Delta DBC$, $\frac{DB}{BC} = \tan 60° \Rightarrow \frac{h+7}{x} = \sqrt{3}$

$\Rightarrow h + 7 = \sqrt{3}h$ [$\because h = x$, using (i)]

$\Rightarrow (\sqrt{3} - 1)h = 7$

**Solution:**

$$\Rightarrow h = \frac{7}{\sqrt{3}-1} = \frac{7(\sqrt{3}+1)}{(\sqrt{3}-1)(\sqrt{3}+1)}$$

$$= \frac{7 \times (1.73 + 1)}{2} = 9.5 \text{ m}$$

So, height of the tower is 9.5 m.

**Question 8.**
An aeroplane, when flying at a height of 4000 m from the ground passes vertically above another aeroplane at an instant when the angles of elevation of the two planes from the same point on the ground are 60° and 45° respectively. Find the vertical distance between the aeroplanes at that instant

**Solution:**

Let $y$ is the vertical distance between the aeroplanes.

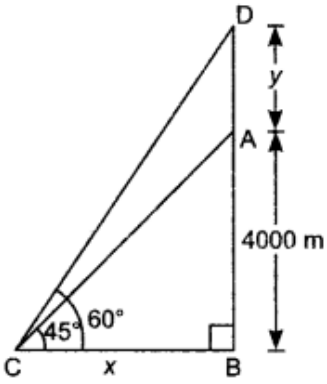


In $\Delta ABC$, $\frac{AB}{BC} = \tan 45° \Rightarrow \frac{4000}{x} = 1$

$\Rightarrow x = 4000$ m ...(i)

Now, in $\Delta DBC$, $\frac{DB}{BC} = \tan 60°$

$\Rightarrow \frac{y + 4000}{x} = \sqrt{3}$

$\Rightarrow \frac{y + 4000}{4000} = \sqrt{3}$ [From (i)]

$\Rightarrow y + 4000 = 4000\sqrt{3} \Rightarrow y = 4000(\sqrt{3} - 1)$

$y = 4000(1.73 - 1)$

$\Rightarrow y = 4000 \times 0.73 \Rightarrow y = 2920$ m

So, distance between the aeroplanes is 2920 m.

## Long Answer Type Questions [4 Marks]

**Question 9.**
A bird is sitting on the top of an 80 m high tree. From a point on the ground, the angle of elevation of the bird is 45°. The bird flies away horizontally in such a way that it remained at a constant height from the ground. After 2 seconds, the angle of elevation of the bird from the same point is 30°. Find the speed of flying of the bird.

**Solution:**

Let BC is 80 m high tree.

After 2 seconds, position of bird is E.

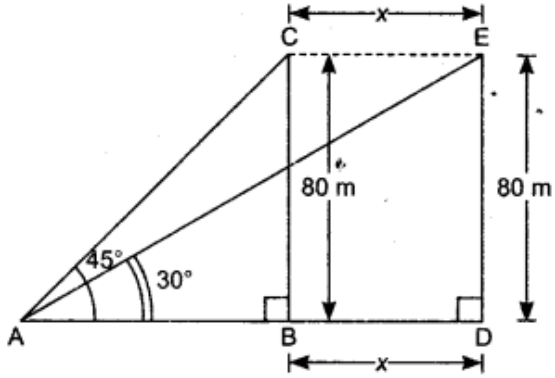


Let $CE = x$

In $\Delta CBA$, $\frac{BC}{AB} = \tan 45°$

$\Rightarrow \frac{80}{AB} = 1$

$\Rightarrow AB = 80$ m

In $\Delta EDA$, $\frac{ED}{AD} = \tan 30°$

$\Rightarrow \frac{80}{AB + BD} = \frac{1}{\sqrt{3}}$

$\Rightarrow \frac{80}{80 + x} = \frac{1}{\sqrt{3}} \Rightarrow 80\sqrt{3} = 80 + x$ $[\because AB = 80 \text{ m}]$

$\Rightarrow x = 80\sqrt{3} - 80 \Rightarrow x = 80(\sqrt{3} - 1)$

$\Rightarrow x = 80(1.732 - 1) \Rightarrow x = 80 \times 0.732$

$\Rightarrow x = 58.56$ m

$\Rightarrow BD = x = 58.56$ m

So, the speed of flying of the bird $= \frac{\text{distance (BD)}}{\text{Time}}$

$= \frac{58.56}{2} = 29.28$ m/s

**Question 10.**
The angles of elevation of the top of a tower from two points at a distance of 4 m and 9 m from the base of the tower and in the same straight line with it are 60° and 30° respectively. Find the height of the tower.
**Solution:**

**Question 11.**
The angle of elevation of the top Q of a vertical tower PQ from a point X on the ground is 60°. From a point Y, 40 m vertically above X, the angle of elevation of the top Q of the tower is 45°. Find the height of the tower PQ and the distance PX.
**Solution:**

Let AB be the tower of height '$h$'.

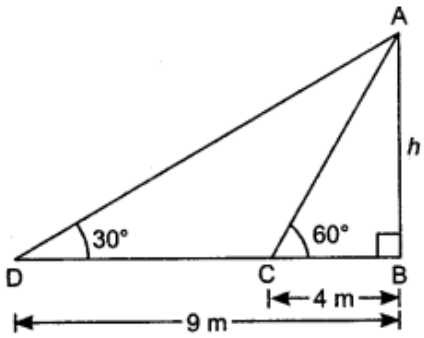


In $\Delta ABC$, $\frac{AB}{BC} = \tan 60°$

$\Rightarrow \frac{h}{4} = \sqrt{3}$

$\Rightarrow h = 4\sqrt{3}$

Let height of PQ be $h$.

Let $z$ be the distance between X and P.

$\because$ XPRY is a rectangle.

$\therefore$ $\quad RP = XY = 40$ m and $PX = YR = z$

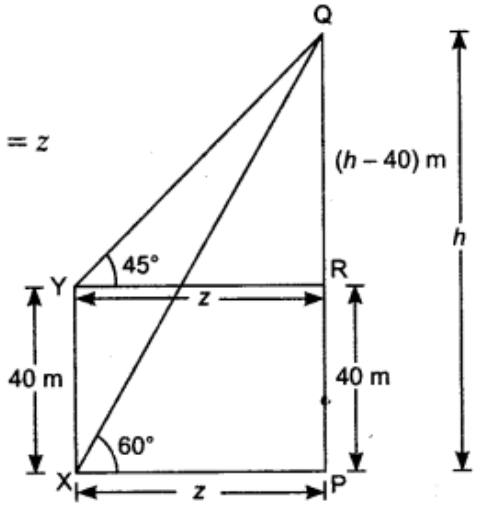


In $\Delta QPX$, $\quad \dfrac{PQ}{PX} = \tan 60° \Rightarrow \dfrac{h}{z} = \sqrt{3}$

$\Rightarrow \quad \dfrac{h}{\sqrt{3}} = z \qquad ...(i)$

In $\Delta QRY$, $\quad \dfrac{QR}{YR} = \tan 45°$

$\Rightarrow \quad \dfrac{h-40}{z} = 1 \Rightarrow h - 40 = z \qquad ...(ii)$

From $(i)$ and $(ii)$, we get

$$\frac{h}{\sqrt{3}} = h - 40 \Rightarrow h = h\sqrt{3} - 40\sqrt{3} \Rightarrow h\sqrt{3} - h = 40\sqrt{3}$$

$$\Rightarrow \quad h(\sqrt{3} - 1) = 40\sqrt{3}$$

$$\Rightarrow \quad h = \frac{40\sqrt{3}}{(\sqrt{3}-1)} = \frac{40\sqrt{3}(\sqrt{3}+1)}{(\sqrt{3}-1)(\sqrt{3}+1)} = \frac{40(3+\sqrt{3})}{2}$$

$$\Rightarrow \quad h = 20(3 + 1.73) = 20 \times 4.73 = 94.6 \text{ m} \qquad ...(iii)$$

So, height of the tower PQ $= 94.6$ m

and the distance PX $= 94.6 - 40 = 54.6$ m [From $(ii)$ and $(iii)$]

**Question 12.**

As observed from the top of a lighthouse, 100 m high above sea level, the angles of depression of a ship, sailing directly towards it, changes from 30° to 60°. Find the distance travelled by ship during the period of observation.

**Solution:**

Let AB be the tower of height 100 m.

Let BC $= y$ and CD $= x$.

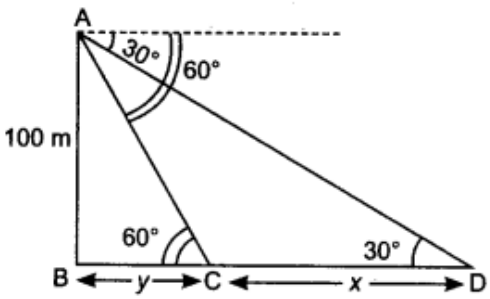


In $\Delta ABC$, $\quad \dfrac{AB}{BC} = \tan 60°$

$\Rightarrow \quad \dfrac{100}{y} = \sqrt{3} \Rightarrow y = \dfrac{100}{\sqrt{3}} \qquad ...(i)$

In $\Delta ABD$, $\quad \dfrac{AB}{BD} = \tan 30° \Rightarrow \dfrac{100}{y+x} = \dfrac{1}{\sqrt{3}}$

$\Rightarrow \quad x + y = 100\sqrt{3} \Rightarrow x = 100\sqrt{3} - y$

$\Rightarrow \quad x = 100\sqrt{3} - \dfrac{100}{\sqrt{3}} = \dfrac{300-100}{\sqrt{3}} = \dfrac{200}{\sqrt{3}}$ ...[(From $(i)$]

$\Rightarrow \quad x = \dfrac{200\sqrt{3}}{3} = \dfrac{200 \times 1.73}{3} = 115.33$m

The distance travelled by the ship is 115.33 m.

**Question 13.**

From a point on the ground, the angle of elevation of the top of a tower is observed to be 60°. From a point 40 m vertically above the first point of observation, the angle of elevation of the top of the tower is 30°. Find the height of the tower and its

horizontal distance from the point of observation.

**Solution:**

Let $h$ be the height of the tower and $x$ be the horizontal distance from the point of observation.

$\because$ BDEC is a rectangle,

$\therefore$ CB = ED = $x$ and CE = BD = 40 m

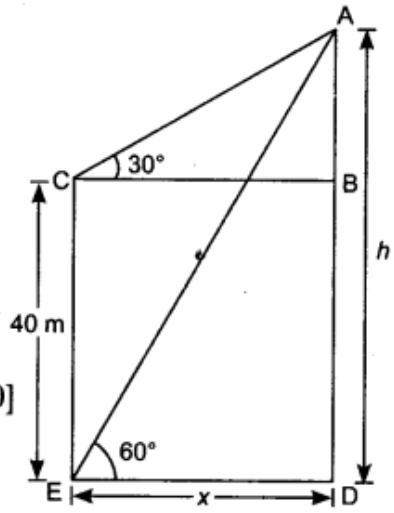


In $\Delta ABC$, $\tan 30° = \frac{AB}{BC}$

$\Rightarrow \frac{1}{\sqrt{3}} = \frac{AB}{x} \Rightarrow x = AB\sqrt{3}$ ...(*i*)

Now, in $\Delta AED$, $\tan 60° = \frac{AD}{DE}$

$\Rightarrow \sqrt{3} = \frac{h}{DE} \Rightarrow x = \frac{h}{\sqrt{3}}$ ...(*ii*)

From equation (*i*) and (*ii*), we get

$$AB\sqrt{3} = \frac{h}{\sqrt{3}} [\because AB + 40 = h \Rightarrow AB = h - 40]$$

$$\sqrt{3}(h - 40) = \frac{h}{\sqrt{3}}$$

$$3(h - 40) = h \Rightarrow 3h - 120 = h$$

$$2h = 120 \Rightarrow h = 60 \text{ m}$$

From (*ii*), $x = \frac{h}{\sqrt{3}} \Rightarrow x = \frac{60}{\sqrt{3}} \Rightarrow x = \frac{60\sqrt{3}}{3}$

$\Rightarrow x = 20\sqrt{3} \Rightarrow x = 34.641$ m

**Question 14.**

**A vertical tower stands on a horizontal plane and is surmounted by a flagstaff of height 5 m. From a point on the ground the angles of elevation of the top and bottom of the flagstaff are 60° and 30° respectively. Find the height of the tower and the distance of the point from the tower. (take = $\sqrt{3}$ = 1.732)**

**Solution:**

Let AB is the tower of height $h$ and DA is the flagstaff of height 5 m and BC = $x$.

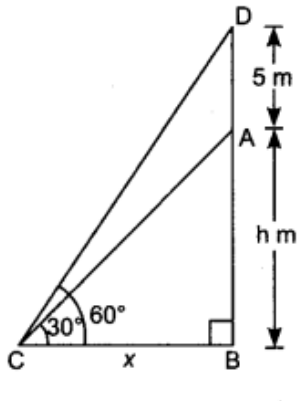


In $\Delta ABC$, $\frac{AB}{BC} = \tan 30°$

$\Rightarrow \frac{h}{x} = \frac{1}{\sqrt{3}}$

$\Rightarrow x = h\sqrt{3}$ ...(*i*)

Now, in $\Delta DBC$, $\frac{DB}{BC} = \tan 60°$

$\frac{5+h}{x} = \sqrt{3}$

$\Rightarrow \frac{5+h}{\sqrt{3}} = x$ ..(*ii*)

From (*i*) and (*ii*), we get

$h\sqrt{3} = \frac{h+5}{\sqrt{3}} \Rightarrow 3h = h + 5$

$\Rightarrow 2h = 5$

$\Rightarrow h = \frac{5}{2} = 2.5$ m

Height of tower is 2.5 m.

Distance of point C from tower = $2.5 \times \sqrt{3} = 2.5 \times 1.732 = 4.33$ m [From (*i*)]

**2015**

**Very Short Answer Type Questions [1 Mark]**

**Question 15.**

The tops of two towers of height x and y, standing on level ground, subtend angles of 30° and 60° respectively at the centre of the line joining their feet, then find x:y

**Solution:**

In $\Delta ABE$, $\frac{x}{a} = \tan 30°$

$\frac{x}{a} = \frac{1}{\sqrt{3}}$

$\Rightarrow$ $x = \frac{a}{\sqrt{3}}$

In $\Delta CDE$, $\frac{y}{a} = \tan 60°$

$\frac{y}{a} = \sqrt{3} \Rightarrow y = a\sqrt{3}$

Now, $\frac{\frac{x}{a}}{\frac{y}{a}} = \frac{\frac{a}{\sqrt{3}}}{a\sqrt{3}}$

$\frac{x}{a} \times \frac{a}{y} = \frac{a}{\sqrt{3}} \times \frac{1}{a\sqrt{3}}$

$\frac{x}{y} = \frac{1}{3}$

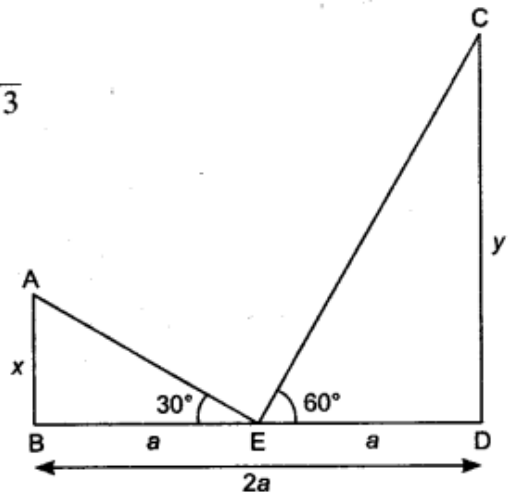


**Question 16.**

**In Figure 1, a tower AB is 20 m high and BC, its shadow on the ground, is $20\sqrt{3}$ m long. Find the Sun's altitude.**

**Solution:**

Let Sun's altitude $= \theta = \angle ACB$

$\therefore$ $\tan\theta = \frac{AB}{BC}$

$\tan\theta = \frac{20}{20\sqrt{3}} = \frac{1}{\sqrt{3}} \Rightarrow \theta = 30°$

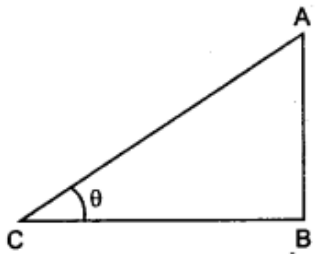


**Question 17.**

**A pole casts a shadow of length $20\sqrt{3}$ m on the ground, when the sun's elevation is 60°. Find the height of the pole.**

**Solution:**

Let AB is Pole and BC is its shadow

Here $\tan 60° = \frac{AB}{BC}$

$\Rightarrow$ $\sqrt{3} = \frac{AB}{2\sqrt{3}}$

$\Rightarrow$ $AB = 6$ m

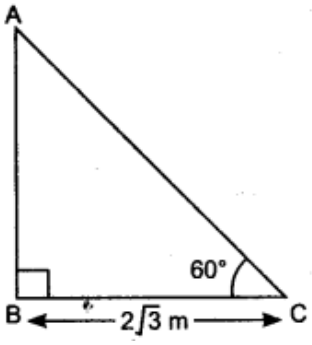


**Short Answer Type Questions II [3 Marks]**

**Question 18.**
The angle of elevation of the top of a building from the foot of the tower is 30° and the angle of deviation of the top of the tower from the foot of the building is 45°. If the tower is 30 m high, find the height of the building.
**Solution:**

AB is the tower of height 30 m and CD is the building

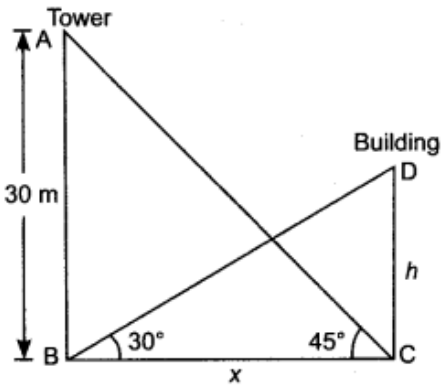


In $\Delta ABC$, $\frac{AB}{BC} = \tan 45°$

$\frac{30}{x} = 1 \Rightarrow x = 30$ m

Now, in $\Delta DCB$, $\frac{h}{x} = \tan 30°$

$\frac{h}{30} = \frac{1}{\sqrt{3}}$ $(\because x = 30 \text{ m})$

$h = \frac{30}{\sqrt{3}} = \frac{30\sqrt{3}}{3}$

$h = 10\sqrt{3}$

$h = 10 \times 1.732 = 17.32$ m

Hence, the height of the building is 17.32 m.

**Question 19.**
The angle of elevation of an aeroplane from point A on the ground is 60°. After a flight of 15 seconds, the angle of elevation changes to 30°. If the aeroplane is flying at a constant height of 1500/3 m, find the speed of the plane in km/hr.
**Solution:**

Let plane is at P. After 15 seconds it reaches at Q.

$\therefore$ Distance covered in 15 seconds = PQ

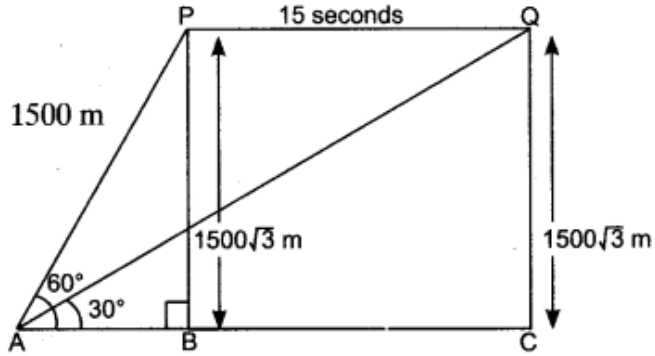


In right $\Delta PBA$, $\frac{PB}{AB} = \tan 60°$

$\frac{1500\sqrt{3}}{AB} = \sqrt{3} \Rightarrow AB = 1500$ m

In right $\Delta QCA$,

$\frac{QC}{AC} = \tan 30°$

$\Rightarrow \frac{1500\sqrt{3}}{AC} = \frac{1}{\sqrt{3}}$

$\Rightarrow AC = 4500$ m

$BC = AC - AB = 4500 - 1500 = 3000$ m

Also $PQ = BC$

$\therefore PQ = 3000$ m

$\text{Speed} = \frac{\text{Distance covered}}{\text{Time taken}}$

$= \frac{3000}{15}$ m/s $= 200$ m/s $= 200 \times \frac{3600}{1000}$ km/hr $= 720$ km/hr

**Question 20.**
From the top of a tower of height 50 m, the angles of depression of the top and bottom of a pole are 30° and 45° respectively. Find:

1. how far the pole is from the bottom of a tower,
2. the height of the pole. (Use √3 = 1.732)

**Solution:**

(*i*) Let AB is the tower and CD is the pole such that ∠XAC = 30° and ∠XAD = 45°

∴ ∠ACE = 30° and ∠ADB = 45°.

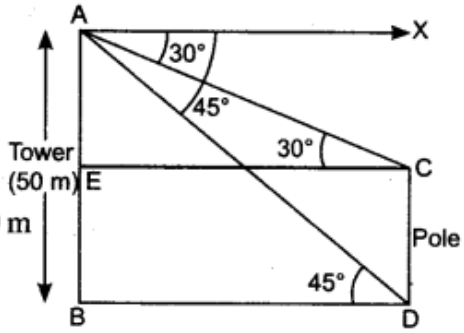


Now, in ΔABD,

$$\frac{BD}{AB} = \cot 45°$$

$$\Rightarrow \quad \frac{BD}{50} = 1 \Rightarrow BD = 50$$

∴ Distance of pole from the bottom of tower = 50 m

(*ii*) In ΔAEC,

$$\frac{AE}{EC} = \tan 30°$$

$$\Rightarrow \quad \frac{AE}{50} = \frac{1}{\sqrt{3}} \qquad [\because EC = BD]$$

$$\Rightarrow \quad AE = \frac{50}{\sqrt{3}} \text{ m}$$

Now, $CD = BE$

$$\Rightarrow \quad CD = AB - AE$$

$$\Rightarrow \quad CD = 50 - \frac{50}{\sqrt{3}} \qquad \left(\because AE = \frac{50}{\sqrt{3}}\right)$$

$$= \frac{50\sqrt{3} - 50}{\sqrt{3}} = \frac{50(\sqrt{3} - 1)}{\sqrt{3}}$$

$$= \frac{50(\sqrt{3} - 1)}{\sqrt{3}} \times \frac{\sqrt{3}}{\sqrt{3}} = \frac{50(3 - \sqrt{3})}{3}$$

$$= \frac{50(3 - 1.732)}{3} = 21.13 \text{ m}$$

Hence, the height of the pole is 21.13 m.

## Long Answer Type Questions [4 Marks]

**Question 21.**
From a point P on the ground, the angle of elevation of the top of a tower is 30° and that of the top of a flagstaff fixed on the top of the tower, is 60°. If the length of the flagstaff is 5 m, find the height of the tower.
**Solution:**

In figure, AD is the flagstaff of height 5 m and BD is the tower of height $h$. (say)
Let BP = $x$

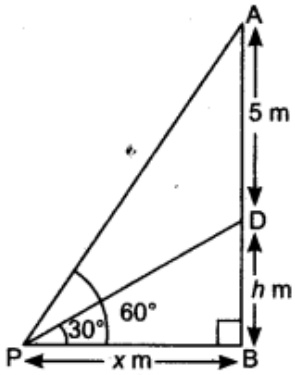


In $\Delta DBP$,
$$\frac{DB}{PB} = \tan 30°$$
$$\frac{h}{x} = \frac{1}{\sqrt{3}}$$
$$\Rightarrow \quad x = h\sqrt{3} \quad ...(i)$$
In $\Delta ABP$,
$$\frac{AB}{PB} = \tan 60°$$
$$\frac{h+5}{x} = \sqrt{3}$$
$$\Rightarrow \quad x = \frac{h+5}{\sqrt{3}} \quad ...(ii)$$

From equation ($i$) and ($ii$), we get
$$\frac{h+5}{\sqrt{3}} = h\sqrt{3}$$
$$\Rightarrow \quad h + 5 = 3h \Rightarrow 2h = 5$$
$$\Rightarrow \quad h = \frac{5}{2} = 2.5 \text{ m}$$
Hence, height of the tower is 2.5 m.

**Question 22.**
At a point, A, 20 metres above the level of water in a lake, the angle of elevation of a cloud is 30°. The angle of depression of the reflection of the cloud in the lake, at A, is 60°. Find the distance of the cloud from A,
**Solution:**
Let C is the cloud and R is its reflection.
$\angle DAC = 30°$, $\angle DAR = 60°$, let CD = $x$
$\therefore$ Height of the cloud above the lake = $(x + 20)$ m
$\therefore$ ER = $(20 + x)$ m.

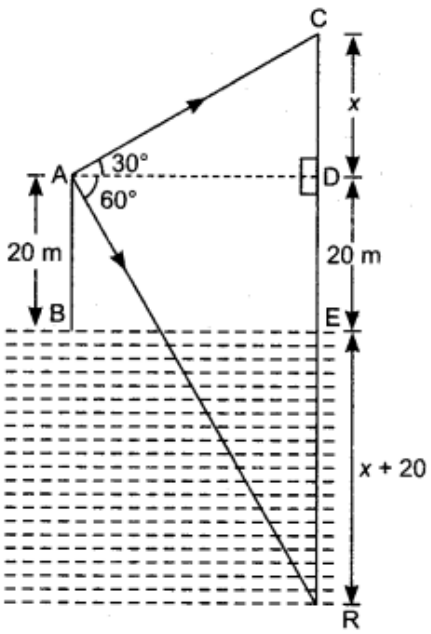


Now, in right $\Delta ADC$,
$$\frac{CD}{AD} = \tan 30°$$
$$\Rightarrow \quad \frac{x}{AD} = \frac{1}{\sqrt{3}}$$
$$\Rightarrow \quad AD = \sqrt{3x} \quad ...(i)$$
In right, $\Delta ADR$,
$$\frac{DR}{AD} = \tan 60°$$
$$\Rightarrow \quad \frac{DE + ER}{AD} = \sqrt{3}$$
$$\Rightarrow \quad \frac{20 + 20 + x}{\sqrt{3x}} = \sqrt{3} \quad \text{[using } (i)\text{]}$$
$$40 + x = 3x \Rightarrow x = 20 \text{ m}$$
Now, in right $\Delta ADC$,
$$\frac{AC}{CD} = \text{cosec } 30° \Rightarrow \frac{AC}{20} = 2 \Rightarrow AC = 40 \text{ m}$$
Hence, the distance of the cloud from A is 40 m.

**Question 23.**
Two poles of equal heights are standing opposite each other on either side of the road which is 80 m wide. From a point P between them on the road, the angle of elevation of the top of a pole is 60° and the angle of depression from the top of another pole at point P is 30°. Find the heights of the poles and the distance of the point P from the poles.

**Solution:**

Let AB and CD are two poles.

Let BP = $x$

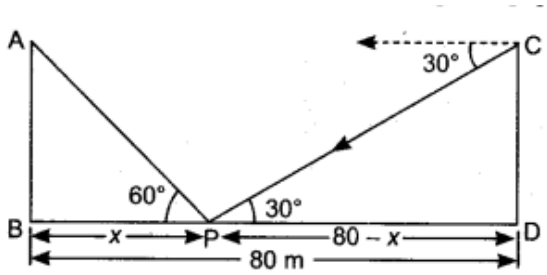


$\therefore \quad PD = (80 - x)$

In right $\Delta PBA$, $\quad \frac{AB}{BP} = \tan 60°$

$\Rightarrow \quad \frac{AB}{BP} = \sqrt{3}$

$\Rightarrow \quad AB = \sqrt{3}x \quad ...(i)$

In right $\Delta CDP$, $\quad \frac{CD}{PD} = \tan 30°$

$\Rightarrow \quad CD = \frac{1}{\sqrt{3}}(80 - x)$

$\because \quad AB = CD$

$\therefore \quad \sqrt{3}x = \frac{1}{\sqrt{3}}(80 - x)$

$3x = 80 - x \Rightarrow 4x = 80 \Rightarrow x = 20$ m

Now, $\quad AB = \sqrt{3}x \Rightarrow AB = 20\sqrt{3}$ m $\quad$ [From $(i)$]

Hence, the height of each pole is $20\sqrt{3}$ m and the distance of point P from the pole with angle of elevation 60° is 20 m and the distance of point P from pole with angle of 30° is 60 m.

## 2014

### Short Answer Type Questions II [3 Marks]

**Question 24.**
Two ships are there in the sea on either side of a lighthouse in such a way that the ships and the lighthouse are in the same straight line. The angles of depression of two ships as observed from the top of the lighthouse are 60° and 45°. If the height of the lighthouse is 200 m, find the distance between the two ships.

**Solution:**

Let AB be the light house of height 200 m.

C and D are two ships on either sides of light house with angles of depression 60° and 45° respectively.

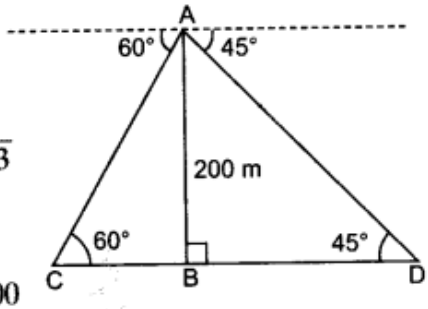


In $\Delta ABD$, $\frac{AB}{BD} = \tan 45° \Rightarrow \frac{200}{BD} = 1$

$\Rightarrow$ $BD = 200$ m

Now, in $\Delta ABC$ $\frac{AB}{BC} = \tan 60° \Rightarrow \frac{200}{BC} = \sqrt{3}$

$\Rightarrow$ $BC = \frac{200}{\sqrt{3}}$ m

$\therefore$ Distance between the ships $= BC + BD = \frac{200}{\sqrt{3}} + 200$

$= \frac{200\sqrt{3}}{3} + 200 = \frac{200 \times 1.73}{3} + 200 = \frac{346}{3} + 200$

$= 115.33 + 200 = 315.33$ m

**Question 25.**

The angle of elevation of an aeroplane from a point on the ground is 60°. After a flight of 30 seconds, the angle of elevation becomes 30°. If the aeroplane is flying at a constant height of 3000√3 m, find the speed of the aeroplane.

**Solution:**

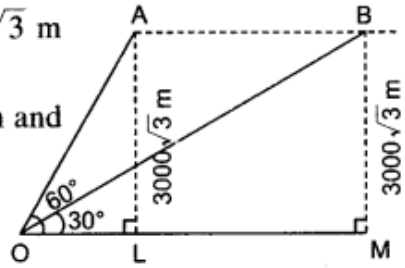


From the point of observation (O), plane is at A, $AL = 3000\sqrt{3}$ m and $\angle AOL = 60°$.

After 30 seconds, plane is at B, therefore, $BM = 3000\sqrt{3}$ m and $\angle BOM = 30°$.

Distance AB is covered in 30 seconds.

In right-angled triangle OLA,

$$\frac{OL}{AL} = \cot 60°$$

$\Rightarrow$ $OL = 3000\sqrt{3} \times \frac{1}{\sqrt{3}} = 3000$ m ...(*i*)

In right-angled triangle OMB,

$$\frac{OM}{BM} = \cot 30°$$

$\Rightarrow$ $OM = 3000\sqrt{3} \times \sqrt{3} = 9000$ m ...(*ii*)

$\therefore$ $AB = LM = OM - OL = (9000 - 3000) = 6000$ m [from (*i*) and (*ii*)]

Now, distance covered in 30 s = 6000 m

$\therefore$ Distance covered in 1 hour (3600 s) $= \frac{6000}{30} \times \frac{3600}{1000}$ km $= 720$ km

$\therefore$ Speed of the aeroplane is 720 km/h.

**Question 26.**

Two ships are approaching a lighthouse from opposite directions. The angles of depression of the two ships from the top of the lighthouse are 30° and 45°. If the distance between the two ships is 100 m, find the height of the lighthouse

**Solution:**

Let AB is lighthouse of height $h$ m. Two ships are represented by C and D where the angles of depression from the lighthouse are 45° and 30° as shown.

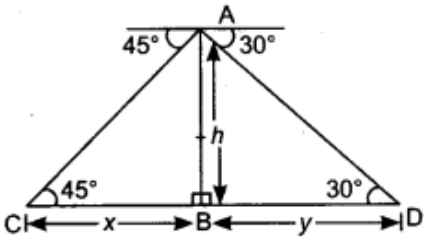


Using alternate angles, $\angle ACB = 45°$ and $\angle ADB = 30°$.

Let $BC = x$ and $BD = y$

Given: $CD = 100$ m

$\Rightarrow \quad x + y = 100 \quad ...(i)$

In right-angled triangle ABC,

$$\frac{BC}{AB} = \cot 45° \Rightarrow \frac{x}{h} = 1$$

$\Rightarrow \quad x = h \quad ...(ii)$

In right-angled triangle ABD,

$$\frac{BD}{AB} = \cot 30° \Rightarrow \frac{y}{h} = \sqrt{3}$$

$\Rightarrow \quad y = \sqrt{3}h \quad ...(iii)$

Putting the values of $x$ and $y$ from $(ii)$ and $(iii)$ in $(i)$, we have

$$h + \sqrt{3}h = 100$$

$$\Rightarrow \quad (\sqrt{3}+1)h = 100 \Rightarrow h = \frac{100}{\sqrt{3}+1}$$

$$\Rightarrow \quad h = \frac{100(\sqrt{3}-1)}{3-1} \text{ m} \Rightarrow h = \frac{100(\sqrt{3}-1)}{2}$$

$$= 50(1.732 - 1) \text{ m} = 50 \times 0.732 = 36.6 \text{ m}$$

Hence, height of the lighthouse is 36.6 m.

## Long Answer Type Questions [4 Marks]

**Question 27.**

The angles of elevation and depression of the top and the bottom of a tower from the top of a building, 60 m high, are 30° and 60° respectively. Find the difference between the heights of the building and the tower and the distance between them

**Solution:**

Let AB be the tower and CD be the building of height 60 m.

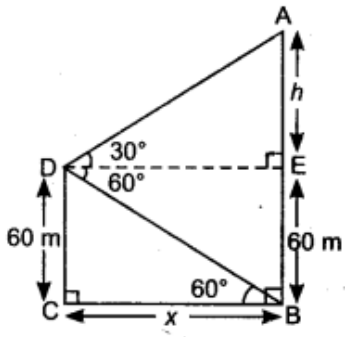


Let $AE = h$ and $BC = x$

In $\Delta AED$, $\frac{AE}{DE} = \tan 30°$

$\Rightarrow \frac{h}{x} = \frac{1}{\sqrt{3}}$ $[\because DE = BC = x]$

$\Rightarrow h = \frac{x}{\sqrt{3}}$ ...(i)

In $\Delta DCB$, $\frac{DC}{CB} = \tan 60°$

$\Rightarrow \frac{60}{x} = \sqrt{3} \Rightarrow x = \frac{60}{\sqrt{3}} = 20\sqrt{3}$

$\therefore$ Distance between the tower and the building is $20\sqrt{3}$ m.

$\because h = \frac{x}{\sqrt{3}} = \frac{20\sqrt{3}}{\sqrt{3}} = 20$ m

Difference between the heights of the building and the tower is 20 m.

**Question 28.**

From the top of a 60 m high building, the angles of depression of the top and the bottom of a tower are 45° and 60° respectively. Find the height of the tower.

**Solution:**

Let AB be 60 m high building and CD be the tower of height $h$. Angles of depression from top of building to the top and the bottom of the tower are 45° and 60° respectively.

$\therefore \angle ACE = 45°$ and $\angle ADB = 60°$ (using alternate angles)

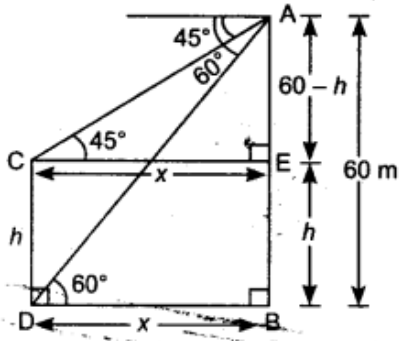


Let $BD = CE = x$

$BE = CD = h$

$\therefore AE = 60 - h$

In right-angled triangle ABD,

$\frac{BD}{AB} = \cot 60°$

$\Rightarrow \frac{x}{60} = \frac{1}{\sqrt{3}}$

$\Rightarrow x = \frac{60}{\sqrt{3}} = \frac{60}{\sqrt{3}} \times \frac{\sqrt{3}}{\sqrt{3}} = 20\sqrt{3}$ ...(i)

In right-angled triangle AEC,

$\frac{AE}{CE} = \tan 45°$

$\Rightarrow \frac{60 - h}{x} = 1$

$\Rightarrow 60 - h = x$

$\Rightarrow h = 60 - x$

$\Rightarrow h = 60 - 20\sqrt{3}$ [using (i)]

$\Rightarrow h = 20[3 - \sqrt{3}] = 20[3 - 1.73] = 20 \times 1.27 = 25.4$ m

$\therefore$ Height of the tower is 25.4 m.

**Question 29.**
The angle of elevation of the top of a tower at a distance of 120 m from point A on the ground is 45°. If the angle of elevation of the top of a flagstaff fixed at the top of the tower, at A is 60°, then find the height of the flagstaff.
**Solution:**

Let BC be the tower and BD be the flagstaff of height $h$.

Let BC = $x$

AC = 120 m, ∠BAC = 45° and ∠DAC = 60°

In right-angled triangle ACB,

$$\frac{AC}{BC} = \cot 45° \Rightarrow \frac{120}{x} = 1$$

$$\Rightarrow \quad x = 120 \quad ...(i)$$

In right-angled triangle ACD,

$$\frac{CD}{AC} = \tan 60° \Rightarrow \frac{h+x}{120} = \sqrt{3}$$

$$\Rightarrow \quad h + x = 120\sqrt{3}$$

$$\Rightarrow \quad h = 120\sqrt{3} - 120 \quad [\text{using } (i), x = 120]$$

$$\Rightarrow \quad h = 120[\sqrt{3} - 1]$$

$$\Rightarrow \quad h = 120[1.73 - 1] \text{ m}$$

$$\Rightarrow \quad h = 120 \times 0.73 = 87.6 \text{ m}$$

∴ Height of the flagstaff is 87.6 m.

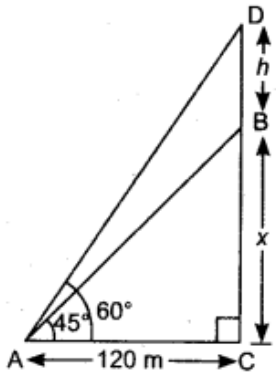


**Question 30.**
The angle of elevation of the top of a chimney from the foot of a tower is 60° and the angle of depression of the foot of the chimney from the top of the tower is 30°. If the height of the tower is 40 m, find the height of the chimney. According to pollution control norms, the minimum height of a smoke emitting chimney should be 100 m. State if the height of the above-mentioned chimney meets the pollution norms. What value is discussed in this question?
**Solution:**

Let AB represents the tower of height 40 m and CD represents the chimney of height $h$. Let BD $= x$

Using alternate angle, $\angle ADB = 30°$ and $\angle CBD = 60°$

In right-angled triangle ABD,

$$\frac{BD}{AB} = \cot 30° \Rightarrow \frac{x}{40} = \sqrt{3}$$

$$\Rightarrow \quad x = 40\sqrt{3}\text{ m} \quad ...(i)$$

In right-angled triangle BDC,

$$\frac{CD}{BD} = \tan 60°$$

$$\Rightarrow \quad \frac{h}{40\sqrt{3}} = \sqrt{3} \quad [\text{from } (i)]$$

$$\Rightarrow \quad h = 40 \times 3 = 120\text{ m}$$

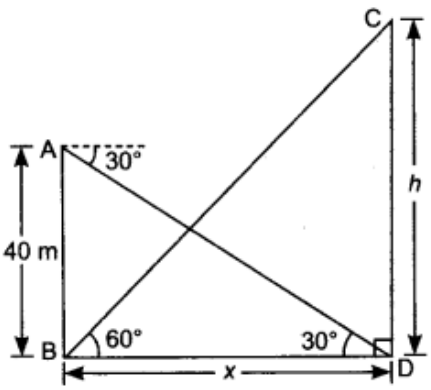


$\therefore$ Height of the chimney is 120 m.

Here chimney meets the norms of pollution controller. In this question, care has been taken to control the pollution because pollution is a big health hazard.

## 2013

### Short Answer Type Questions II [3 Marks]

**Question 31.**
The horizontal distance between the two poles is 15 m. The angle of depression of the top of the first pole as seen from the top of the second pole is 30°. If the height of the second pole is 24 m, find the height of the first pole

**Solution:**

In figure, AB is the 1st pole and CD is 2nd pole.

In $\Delta CEA$, $\quad \frac{CE}{AE} = \tan 30° = \frac{1}{\sqrt{3}}$

$$\Rightarrow \quad \frac{x}{15} = \frac{1}{\sqrt{3}} \Rightarrow x = \frac{15}{\sqrt{3}}\text{ m}$$

$$\Rightarrow \quad x = \frac{15}{\sqrt{3}} \times \frac{\sqrt{3}}{\sqrt{3}} = 5\sqrt{3}\text{ m}$$

Now, $\quad DE = 24 - x = 24 - 5\sqrt{3}$

$$= 24 - 5 \times 1.732$$

$$= 24 - 8.660$$

$$= 15.34\text{ m}$$

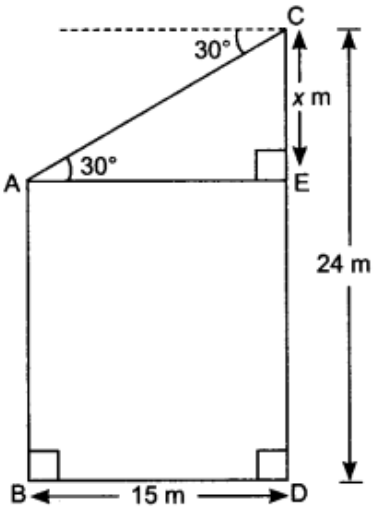


AB = DE = 15.34 m

Hence, height of the first pole is 15.34 m.

**Question 32.**
As observed from the top of a 60 m high lighthouse from the sea-level, the angles of depression of two ships are 30° and 45°. If one ship is exactly behind the other on the same side of the lighthouse, find the distance between the two ships.

**Solution:**

Let one ship be at point P and other ship be at point Q. AB be lighthouse of height 60 m.

In $\Delta ABP$, $\tan 45° = \frac{AB}{BP}$

$\Rightarrow$ $1 = \frac{60}{BP}$

$\Rightarrow$ $BP = 60$ m

In $\Delta ABQ$, $\tan 30° = \frac{AB}{BQ}$

$\frac{1}{\sqrt{3}} = \frac{AB}{BQ}$

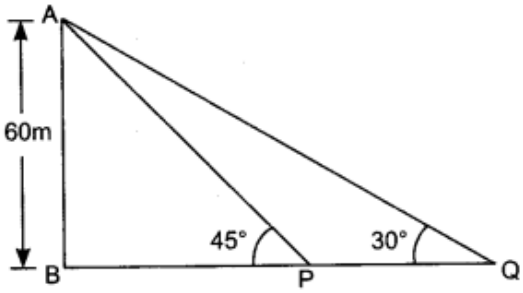


$BQ = AB\sqrt{3} = 60(\sqrt{3}) = 60(1.732) = 103.92$ m

Distance between two ships $= BQ - BP = 103.92 - 60 = 43.92$ m

**Question 33.**
The angles of elevation of the top of a tower from two points at a distance of 6 m and 13.5 m from the base of the tower and in the same straight line with it are complementary. Find the height of the tower.

**Solution:**

$\angle ACB$ and $\angle ADB$ are complementary angles.

Let $\angle ACB = \theta \Rightarrow \angle ADB = 90° - \theta$

Let height of the tower $AB = h$

In $\Delta ABC$, $\tan\theta = \frac{h}{6}$ ...(*i*)

In $\Delta ABD$, $\tan(90° - \theta) = \frac{h}{13.5} \Rightarrow \cot\theta = \frac{h}{13.5}$

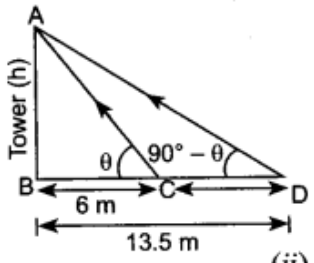


$\Rightarrow$ $\tan\theta = \frac{13.5}{h}$ ...(*ii*)

$\frac{h}{6} = \frac{13.5}{h}$ [From (*i*) and (*ii*)]

$\Rightarrow$ $h^2 = 13.5 \times 6 = 81.0 \Rightarrow h = 9$ m

## Short Answer Type Questions II [3 Marks]

**Question 34.**
The angle of elevation of the top of a building from the foot of the tower is 30° and the angle of elevation of the top of the tower from the foot of the building is 60°. If the tower is 60 m high, find the height of the building.

**Solution:**

Let AB is the building and CD is the tower.

In $\Delta DCB$, $\frac{60}{x} = \tan 60° \Rightarrow x = \frac{60}{\sqrt{3}}$ ...(i)

Now, in $\Delta ABC$, $\frac{AB}{x} = \tan 30°$

$\Rightarrow$ $AB = \frac{x}{\sqrt{3}}$

$\Rightarrow$ $AB = \frac{60}{\sqrt{3} \times \sqrt{3}} = \frac{60}{3} = 20$ m [Using (i)]

Hence, height of the building is 20 m.

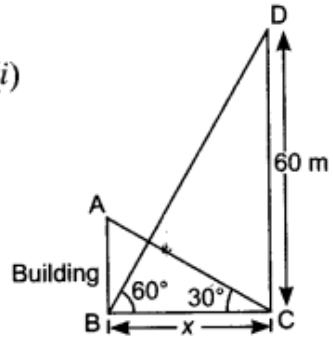


**Question 35.**

From point P on the ground, the angle of elevation of the top of a 10 m tall building is 30°. A flagstaff is fixed at the top of the building and the angle of elevation of the top of the flagstaff from point P is 45°. Find the length of the flagstaff and the distance of the building from point P.

**Solution:**

Let height of flagstaff be $h$ and the distance of the building from the point P be $x$.

In $\Delta BCP$, $\frac{BC}{CP} = \tan 30° = \frac{1}{\sqrt{3}}$

$\Rightarrow$ $\frac{10}{x} = \frac{1}{\sqrt{3}}$

$\Rightarrow$ $x = 10\sqrt{3}$ ...(i)

In $\Delta ACP$, $\frac{AC}{PC} = \tan 45°$

$\Rightarrow$ $\frac{h+10}{x} = 1 \Rightarrow h + 10 = x$

$\Rightarrow$ $h + 10 = 10\sqrt{3}$ [From (i)]

$\Rightarrow$ $h = 10(\sqrt{3} - 1) = 10(1.73 - 1) = 10 \times (0.73) = 7.3$ m

$\therefore$ Height of the flagstaff is 7.3 m.

The distance of the building from the point P $= 10\sqrt{3} = 10 \times 1.73 = 17.3$ m

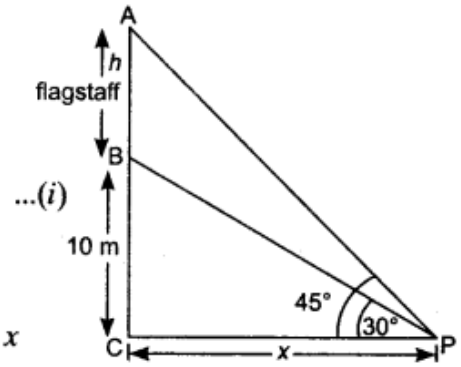


**Question 36.**

Two poles of equal heights are standing opposite each other on either side of the road, which is 80 m wide. From a point between them on the road, the angles of elevation of the top of the poles are 60° and 30° respectively. Find the height of the poles and the distances of the point from the poles.

**Solution:**

In figure, AB and CD are two poles of equal heights $h$.

Let BP $= x$ and PD $= 80 - x$

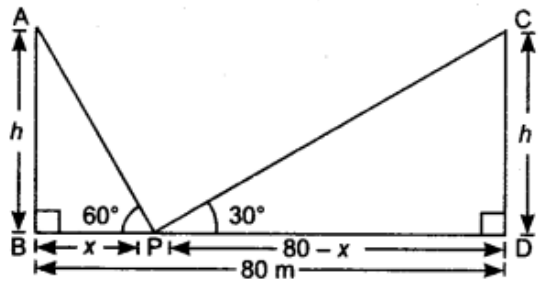


In $\Delta ABP$, $\quad \frac{h}{x} = \tan 60° = \sqrt{3}$

$\Rightarrow \quad h = \sqrt{3}x \quad ...(i)$

In $\Delta CDP$, $\quad \frac{h}{80-x} = \tan 30° = \frac{1}{\sqrt{3}}$

$h = \frac{80-x}{\sqrt{3}} \quad ...(ii)$

From equation $(i)$ and $(ii)$, we get

$$\sqrt{3}x = \frac{80-x}{\sqrt{3}}$$

$\Rightarrow \quad 3x = 80 - x \quad \Rightarrow 4x = 80 \Rightarrow x = 20$

Putting the value $x = 20$ in equation $(i)$, we get

$$h = 20\sqrt{3}$$

$\therefore$ Height of the each pole is $20\sqrt{3}$ m.

Distance of the point P from the pole AB = 20 m

Distance of the point P from the pole CD = 80 – 20 = 60 m

**Question 37.**

From the top of a 7 m high building, the angle of elevation of the top of a cable tower is 60° and the angle of depression of its foot is 30°. Determine the height of the tower

**Solution:**

Let AB be the height of the building and CE be the height of the cable tower.

AB = 7 m, $\angle CAD = 60°$ and $\angle DAE = 30°$

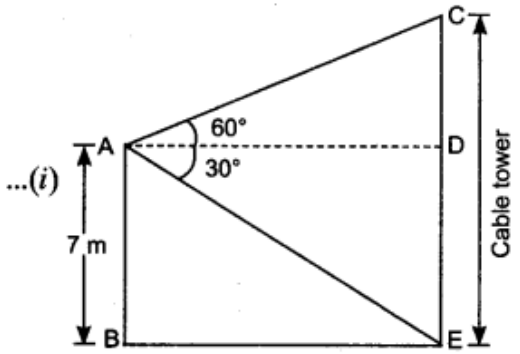


In $\Delta ADC$, $\quad \tan 60° = \frac{CD}{AD}$

$\Rightarrow \quad \sqrt{3} = \frac{CD}{AD}$

$\Rightarrow \quad AD = \frac{CD}{\sqrt{3}} \quad ...(i)$

In $\Delta ADE$, $\quad \tan 30° = \frac{DE}{AD}$

$\Rightarrow \quad \frac{1}{\sqrt{3}} = \frac{DE}{AD}$

$AD = DE(\sqrt{3}) \quad ...(ii)$

From $(i)$ and $(ii)$, we get

$$\frac{CD}{\sqrt{3}} = DE(\sqrt{3})$$

$$\frac{CD}{\sqrt{3}} = 7(\sqrt{3}) \Rightarrow CD = 21 \text{ m} \qquad [\because DE = 7 \text{ m}]$$

Total height of the cable tower = CD + DE = 21 + 7 = 28 m

## Short Answer Type Questions II [3 Marks]

**Question 38.**
The shadow of a tower standing on level ground is found to be 20 m longer when the sun's altitude is 45° than when it is 60°. Find the height of the tower.
**Solution:**

Let AB be the tower of the height $x$.
45° and 60° are the two sun's altitudes at two different times.

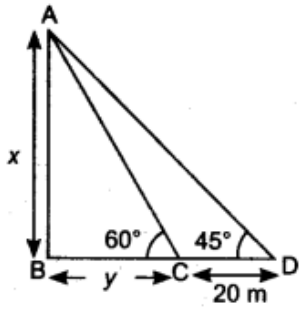


$$CD = 20 \text{ m} \quad \text{(given)}$$

Let $BC = y$

In $\Delta ABC$, $\frac{AB}{BC} = \tan 60°$

$\Rightarrow \frac{x}{y} = \sqrt{3}$

$\Rightarrow x = \sqrt{3}y \quad ...(i)$

In $\Delta ABD$, $\frac{AB}{BD} = \tan 45°$

$$\frac{x}{y+20} = 1$$

$$x = y + 20$$

$$\sqrt{3}y = y + 20 \quad \text{[From (i)]}$$

$$\sqrt{3}y - y = 20$$

$$y(\sqrt{3} - 1) = 20$$

$$y = \frac{20}{\sqrt{3}-1} \times \frac{\sqrt{3}+1}{\sqrt{3}+1}$$

$$= \frac{20(\sqrt{3}+1)}{3-1} = 10(\sqrt{3}+1) = 10(1.732 + 1) = 27.32 \text{ m}$$

$$x = \sqrt{3}y \quad \text{[From (i)]}$$

$$= \sqrt{3} \times 27.32 = 1.732 \times 27.32 = 47.31 \text{ m}$$

Hence, height of the tower is 47.31 m.

**Question 39.**
The angles of depression of two ships from the top of a lighthouse and on the same side of it are found to be 45° and 30°. If the ships are 200 m apart, find the height of the lighthouse

**Solution:**

Let $h$ be the height of the lighthouse.

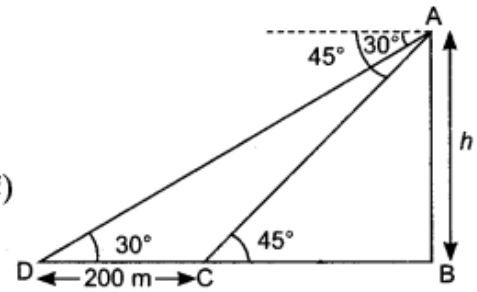


In $\Delta ABC$, $\tan 45° = \frac{AB}{BC}$

$\Rightarrow$ $1 = \frac{h}{BC}$

$\Rightarrow$ $BC = h$ ...(i)

In $\Delta ABD$, $\tan 30° = \frac{AB}{BD}$

$\Rightarrow$ $\frac{1}{\sqrt{3}} = \frac{h}{200 + BC}$

$\Rightarrow$ $h = \frac{200 + BC}{\sqrt{3}} \Rightarrow h = \frac{200 + h}{\sqrt{3}}$ [From (i)]

$\Rightarrow$ $\sqrt{3}h = 200 + h \Rightarrow (\sqrt{3} - 1)h = 200$

$\Rightarrow$ $(1.732 - 1)h = 200 \Rightarrow h = \frac{200}{0.732} = 273.22$ m

**Question 40.**

A kite is flying at a height of 45 m above the ground. The string attached to the kite is temporarily tied to a point on the ground. The inclination of the string with the ground is 60°. Find the length of the string assuming that there is no slack in the string.

**Solution:**

Let AB be the length of the string.

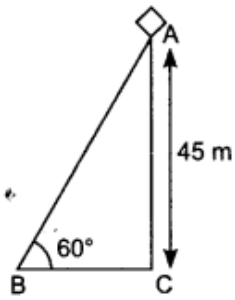


In $\Delta ABC$, $\sin 60° = \frac{AC}{AB}$

$\Rightarrow$ $\frac{\sqrt{3}}{2} = \frac{45}{AB}$

$\Rightarrow$ $AB = \frac{90}{\sqrt{3}} = \frac{90}{3} \times \sqrt{3} = 30\sqrt{3} = 30 \times 1.732 = 51.96$

**Question 41.**

The angles of depression of the top and bottom of a tower as seen from the top of a 60√3 m high cliff are 45° and 60° respectively. Find the height of the tower.

**Solution:**

Let $h$ be the height of the tower.

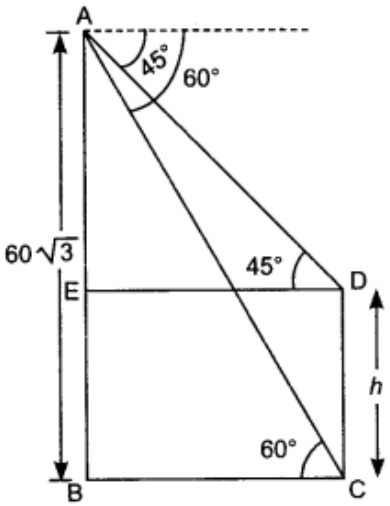


In $\Delta ABC$, $\frac{AB}{BC} = \tan 60°$

$\Rightarrow \frac{60\sqrt{3}}{BC} = \sqrt{3}$

$\Rightarrow BC = 60m$ ...(*i*)

Now, in $\Delta AED$, $\frac{AE}{ED} = \tan 45°$

$\Rightarrow \frac{60\sqrt{3} - h}{BC} = 1$ [$\because AE = AB - BE$]

$\Rightarrow 60\sqrt{3} - h = BC$

$\Rightarrow 60\sqrt{3} - h = 60$

$\Rightarrow h = 60\sqrt{3} - 60 \Rightarrow h = 60(\sqrt{3} - 1)$ [From (*i*)]

$\Rightarrow h = 60(1.73 - 1) = 60 \times 0.73 = 43.8$ m

**Question 42.**

From the top of a tower 50 m high, the angle of depression of the top of a pole is 45° and from the foot of the pole, the angle of elevation of the top of the tower is 60°. Find the height of the pole if the pole and tower stand on the same plane

**Solution:**

EC is transversal to the parallel lines EF and CD.

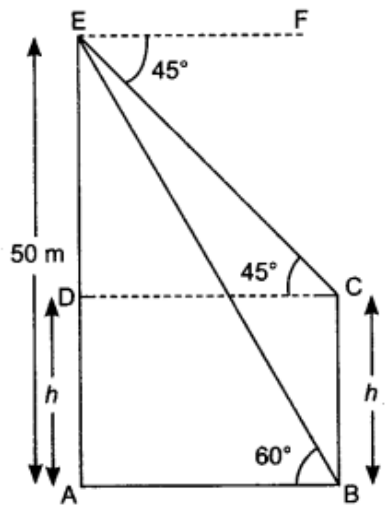


$\therefore \angle FEC = \angle DCE = 45°$

Let the height of the pole is $h$.

In right $\Delta EDC$, $\tan 45° = \frac{ED}{DC}$

$1 = \frac{50 - h}{DC}$

$DC = 50 - h = AB$ ...(*i*)

In right $\Delta EAB$, $\tan 60° = \frac{EA}{AB}$

$\Rightarrow \sqrt{3} = \frac{50}{AB}$ ...(*ii*)

$\therefore \sqrt{3} = \frac{50}{50 - h}$ [From (*i*) and (*ii*)]

$\Rightarrow 50 - h = \frac{50}{\sqrt{3}} \times \frac{\sqrt{3}}{\sqrt{3}} \Rightarrow (50 - h) = \frac{50 \times 1.73}{3}$

$\Rightarrow 3(50 - h) = 86.50 \Rightarrow 150 - 3h = 86.50$

$\Rightarrow 150 - 86.50 = 3h \Rightarrow 63.50 = 3h$

$\Rightarrow h = \frac{63.50}{3} \Rightarrow h = 21.16$ m

**Question 43.**
The angle of depression from the top of a tower of point A on the ground is 30°. On moving a distance of 20 m from point A towards the foot of the tower to point B, the angle of elevation of the top of the tower from point B is 60°. Find the height of the tower and its distance from point A.
**Solution:**

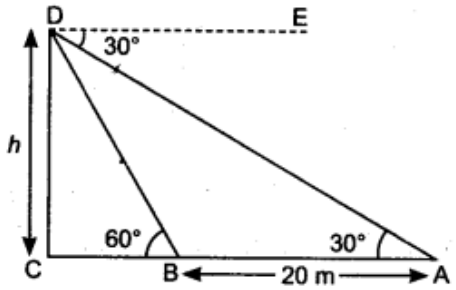


AD is transversal to parallel lines DE and CA,

$\therefore \quad \angle ADE = \angle DAC = 30°$

Let the height of the tower is $h$.

In right $\Delta DCB$, $\quad \tan 60° = \frac{DC}{BC}$

$\Rightarrow \quad \sqrt{3} = \frac{h}{BC}$

$BC = \frac{h}{\sqrt{3}} \quad ...(i)$

In right $\Delta DCA$, $\quad \tan 30° = \frac{DC}{AC}$

$\Rightarrow \quad \frac{1}{\sqrt{3}} = \frac{h}{BC + AB}$

$\Rightarrow \quad \frac{1}{\sqrt{3}} = \frac{h}{BC + 20}$

$\Rightarrow \quad BC + 20 = \sqrt{3}h$

$\Rightarrow \quad \frac{h}{\sqrt{3}} + 20 = \sqrt{3}h \quad$ [From $(i)$]

$\Rightarrow \quad \sqrt{3}h - \frac{h}{\sqrt{3}} = 20$

$\Rightarrow \quad h\left(\sqrt{3} - \frac{1}{\sqrt{3}}\right) = 20$

$\Rightarrow \quad h\left(\frac{3-1}{\sqrt{3}}\right) = 20$

$\Rightarrow \quad h = \frac{20\sqrt{3}}{2} = 10\sqrt{3}$

$\Rightarrow \quad h = 10 \times 1.73 = 17.30 \text{ m}$

On putting $h = 10\sqrt{3}$ in equation $(i)$, we get

$BC = \frac{10\sqrt{3}}{\sqrt{3}} = 10 \text{ m}$

So, the height of the tower in 17.30 m and its distance from point A = 20 + 10 = 30 m

## Long Answer Type Questions [4 Marks]

**Question 44.**
The angle of elevation of the top of a hill at the foot of a tower is 60° and the angle of depression from the top of the tower at the foot of the hill is 30°. If the tower is 50 m high, find the height of the hill.

**Solution:**

Let AB be the tower of the height 50 m.

Let DC be the hill of the height $x$.

Let $y$ be the distance between foot of the hill and the tower.

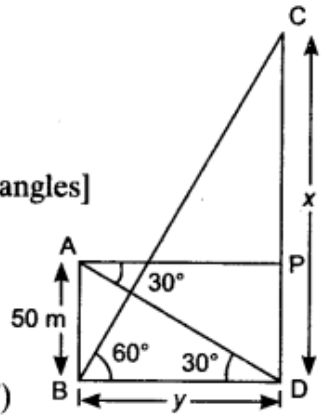


$$\angle CBD = 60°$$

$$\angle PAD = \angle ADB = 30° \quad \text{[Alternate angles]}$$

In $\Delta ABD$, $\frac{AB}{BD} = \tan 30°$

$\Rightarrow$ $\frac{50}{y} = \frac{1}{\sqrt{3}}$

$\Rightarrow$ $y = 50\sqrt{3}$ m ...(*i*)

In $\Delta CDB$, $\frac{CD}{BD} = \tan 60° \Rightarrow \frac{x}{y} = \sqrt{3}$

$\Rightarrow$ $\frac{x}{50\sqrt{3}} = \sqrt{3} \Rightarrow x = 150$ m [From (*i*)]

Hence, height of the hill is 150 m.

**Question 45.**

The angles of elevation and depression of the top and bottom of a lighthouse from the top of a 60 m high building are 30° and 60° respectively. Find

1. the difference between the heights of the lighthouse and the building.
2. the distance between the lighthouse and the building

**Solution:**

Let AB is the building and CD is the lighthouse.

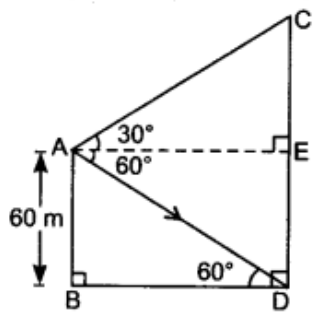


$\therefore$ $AB = 60$ m

$\angle EAC = 30°$ and $\angle EAD = 60°$

$\because$ $AE \parallel BD$

$\therefore$ $\angle ADB = 60°$

In right $\Delta ABD$, $\frac{BD}{AB} = \cot 60°$

$\Rightarrow$ $\frac{BD}{60} = \frac{1}{\sqrt{30}}$

$\Rightarrow$ $BD = \frac{60}{\sqrt{3}} = \frac{60}{\sqrt{3}} \times \frac{\sqrt{3}}{\sqrt{3}} = 20\sqrt{3}$ m

$AE = 20\sqrt{3}$ m ($\because BD = AE$)

Now, in right $\Delta CEA$, $\tan 30° = \frac{CE}{AE}$

$\Rightarrow$ $\frac{1}{\sqrt{3}} = \frac{CE}{20\sqrt{3}} \Rightarrow CE = 20$ m

(*i*) Difference between the heights of the lighthouse and the building = CE = 20 m.

(*ii*) The distance between the lighthouse and the building = $BD = 20\sqrt{3}$ m.

## 2011

### Short Answer Type Questions II [3 Marks]

**Question 46.**
From the top of a tower 100 m high, a man observes two cars on the opposite sides of the tower with angles of depression 30° and 45° respectively. Find the distance between the cars

**Solution:**

Let BD = $y$ and CD = $x$

In right $\Delta ADB$, $\frac{AD}{BD} = \tan 45° \Rightarrow \frac{100}{y} = 1$

$\Rightarrow \quad y = 100$

In right $\Delta ADC$, $\frac{AD}{CD} = \tan 30°$

$\Rightarrow \quad \frac{100}{x} = \frac{1}{\sqrt{3}}$

$\Rightarrow \quad x = 100\sqrt{3}$

Now, $y + x = 100 + 100\sqrt{3}$

$= 100 + 100 \times 1.732$

$= 100 + 173.2 = 273.2$

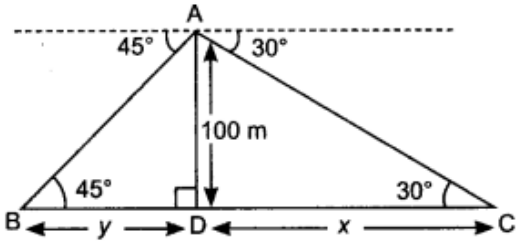


Hence, distance between two cars is 273.2 m.

**Question 47.**
From the top of a vertical tower, the angles of depression of two cars in the same straight line with the base of the tower, at an instant are found to be 45° and 60°. If the cars are 100 m apart and are on the same side of the tower, find the height of the tower.

**Solution:**

Let AB be the tower of height $h$ and C and D are positions of the cars.

Let BC = $x$

In $\Delta ABC$, $\frac{AB}{BC} = \tan 60° \Rightarrow \frac{h}{x} = \sqrt{3}$

$\Rightarrow \quad x = \frac{h}{\sqrt{3}} \quad ...(i)$

In $\Delta ABD$, $\frac{AB}{BD} = \tan 45° \Rightarrow \frac{h}{100 + x} = 1$

$\Rightarrow \quad h = 100 + x \quad ...(ii)$

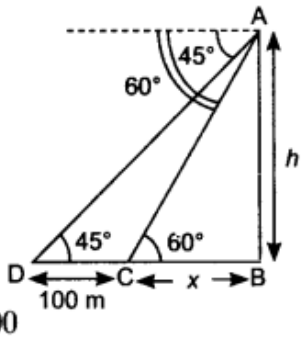


From $(i)$ and $(ii)$, we get

$$h = 100 + \frac{h}{\sqrt{3}} \Rightarrow h - \frac{h}{\sqrt{3}} = 100$$

$$\Rightarrow \quad \sqrt{3}h - h = 100\sqrt{3} \Rightarrow (\sqrt{3} - 1)h = 100\sqrt{3}$$

$$\Rightarrow \quad h = \frac{100\sqrt{3}}{\sqrt{3} - 1}$$

$$\Rightarrow \quad h = \frac{100\sqrt{3}(\sqrt{3} + 1)}{(\sqrt{3} - 1)(\sqrt{3} + 1)} = \frac{100(3 + \sqrt{3})}{2}$$

$$= 50 \times (3 + 1.73) = 50 \times 4.73 = 236.5 \text{ m}$$

Hence, the height of the tower is 236.5 m.

**Question 48.**
A ladder of length 6 m makes an angle of 45° with the floor while leaning against one wall of a room. If the foot of the ladder is kept fixed on the floor and it is made to lean against the opposite wall of the room, it makes an angle of 60° with the floor. Find the distance between these two walls of the room.
**Solution:**
Let AP and DP be the positions of the ladder whose length is 6 m.

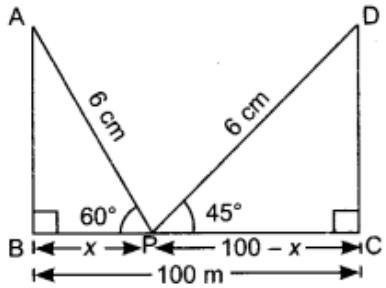


In right $\Delta ABP$, $\frac{BP}{AP} = \cos 60° \Rightarrow \frac{BP}{6} = \frac{1}{2}$

$\Rightarrow$ $BP = \frac{1}{2} \times 6 = 3$ m

In right $\Delta DCP$, $\frac{PC}{DP} = \cos 45° \Rightarrow \frac{PC}{6} = \frac{1}{\sqrt{2}}$

$\Rightarrow$ $PC = \frac{6}{\sqrt{2}} \times \frac{\sqrt{2}}{\sqrt{2}} = \frac{6\sqrt{2}}{2} = 3\sqrt{2}$ m

Distance between two walls $= BP + PC = 3 + 3\sqrt{2} = 3 + 3 \times 1.41 = 3(1 + 1.41)$
$= 3 \times 2.42 = 7.23$ m

## Long Answer Type Questions [4 Marks]

**Question 49.**
Two poles of equal heights are standing opposite each other on either side of the road, which is 100 m wide. From a point between them on the road, the angles of elevation of the top of the poles are 60° and 30°, respectively. Find the height of the poles
**Solution:**
Let AB and CD be the two poles of equal height $h$.

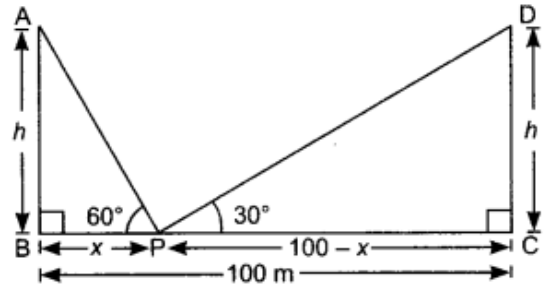


In $\Delta ABP$, $\frac{h}{x} = \tan 60° = \sqrt{3}$

$\Rightarrow$ $x = \frac{h}{\sqrt{3}}$ ...(*i*)

In $\Delta DCP$, $\frac{h}{100 - x} = \tan 30° = \frac{1}{\sqrt{3}}$

$\Rightarrow$ $\sqrt{3}h = 100 - x$

$\Rightarrow$ $x = 100 - h\sqrt{3}$ ...(*ii*)

From (*i*) and (*ii*), we get

$$\frac{h}{\sqrt{3}} = 100 - h\sqrt{3} \Rightarrow h = 100\sqrt{3} - 3h \Rightarrow 4h = 100\sqrt{3} \Rightarrow h = 25\sqrt{3}$$

So, the height of each pole is $25\sqrt{3}$ m.

**Question 50.**
From a point on the ground, the angles of elevation of the bottom and top of a transmission tower fixed at the top of a 10 m high building are 30° and 60° respectively. Find the height of the tower.

**Solution:**

Let CA be the transmission tower of height $h$.

Le PB $= x$

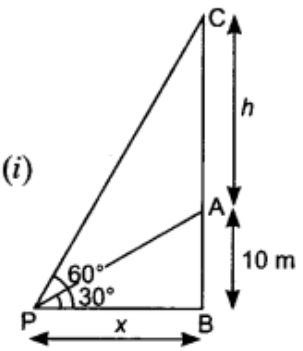


In $\Delta ABP$, $\frac{AB}{BP} = \tan 30°$

$\Rightarrow \frac{10}{x} = \frac{1}{\sqrt{3}} \Rightarrow x = 10\sqrt{3}$ ...(*i*)

In $\Delta CBP$, $\frac{CB}{PB} = \tan 60°$

$\Rightarrow \frac{h+10}{x} = \sqrt{3}$

$\Rightarrow h + 10 = \sqrt{3}x$

$\Rightarrow h + 10 = \sqrt{3} \times \sqrt{3} \times 10$ [From (*i*)]

$\Rightarrow h + 10 = 30 \Rightarrow h = 20$ m

Hence, the height of the tower is 30 m.

**Question 51.**

From the top of a 15 m high building, the angle of elevation of the top of a cable tower is 60° and the angle of depression of its foot is 30°. Determine the height of the tower.

**Solution:**

Let $h$ be the height of the tower.

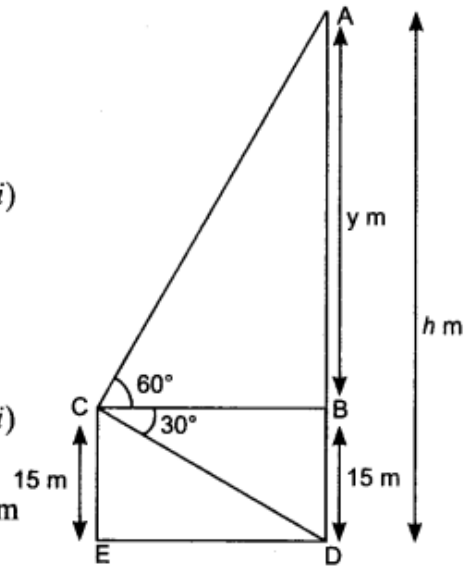


Let $AB = y$

In $\Delta ABC$, $\tan 60° = \frac{AB}{BC}$

$\Rightarrow \sqrt{3} = \frac{y}{BC} \Rightarrow y = \sqrt{3}BC$ ...(*i*)

Now, in $\Delta CBD$, $\tan 30° = \frac{BD}{BC}$

$\Rightarrow \frac{1}{\sqrt{3}} = \frac{15}{BC}$

$\Rightarrow BC = 15\sqrt{3}$ ...(*ii*)

From (*i*) and (*ii*), we get

$y = \sqrt{3} \times 15\sqrt{3} = 15 \times 3 = 45$ m

So, height of the tower is $y + 15 = 45 + 15 = 60$ m

**Question 52.**

The angle of elevation of the top of a vertical tower from a point on the ground is 60°. From another point, 10 m vertically above the first, its angle of elevation is 30. Find the height of the tower.

**Solution:**

Let AB is the tower.

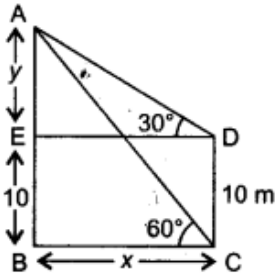


Let $BC = x$ and $AE = y$

$\Rightarrow$ $BE = CD = 10$ m

Also, $BC = DE = x$.

In right $\Delta$ AED, $\frac{AE}{DE} = \tan 30° \Rightarrow \frac{y}{x} = \frac{1}{\sqrt{3}}$

$\Rightarrow$ $x = \sqrt{3}y$ ...(*i*)

In right $\Delta$ ABC, $\frac{AB}{BC} = \tan 60°$

$\Rightarrow$ $\frac{y+10}{x} = \sqrt{3}$

$y + 10 = \sqrt{3}x$

$\Rightarrow$ $y + 10 = \sqrt{3}(\sqrt{3}y)$ [Using (*i*)]

$\Rightarrow$ $y + 10 = 3y \Rightarrow 2y = 10 \Rightarrow y = 5$ m

$\therefore$ The height of the tower = AE + BE = 5 + 10 = 15 m

**Question 53.**

The angles of depression of the top and bottom of a 12 m tall building, from the top of a multi-storeyed building. the multi-storeyed building is 30° and 60° respectively. Find the height of the multi-storeyed building.

**Solution:**

Let AB be the multi-storeyed building of height $h$.

CD be the building of height 12 m.

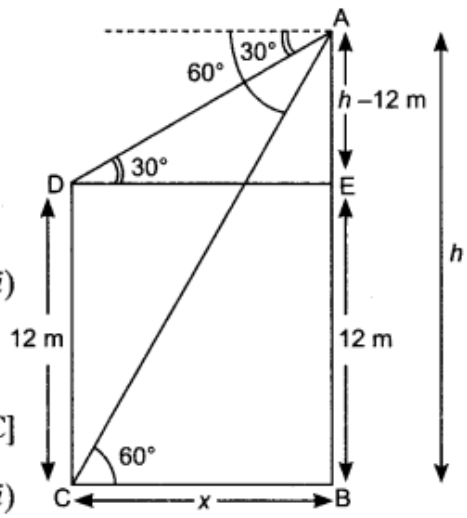


Let $BC = x$

In $\Delta$ABC, $\frac{AB}{BC} = \tan 60°$

$\Rightarrow$ $\frac{h}{x} = \sqrt{3}$

$\Rightarrow$ $x = \frac{h}{\sqrt{3}}$ ...(*i*)

In $\Delta$AED, $\frac{AE}{DE} = \tan 30°$

$\Rightarrow$ $\frac{h-12}{x} = \frac{1}{\sqrt{3}}$ [$\because$ DE = BC]

$\Rightarrow$ $h\sqrt{3} - 12\sqrt{3} = x$ ...(*ii*)

From (*i*) and (*ii*), we get

$$\frac{h}{\sqrt{3}} = h\sqrt{3} - 12\sqrt{3}$$

$\Rightarrow$ $h = 3h - 36 \Rightarrow 2h = 36 \Rightarrow h = 18$ m

Hence, the height of the multi-storeyed building is 18m.

**Question 54.**

The angle of elevation of the top of a building from the foot of a tower is 30° and the angle of elevation of the top of the tower from the foot of the building is 60°. If the 50 m high, find the height of the building

**Solution:**

Let CD be the building of height $h$ and AB be the tower of height 50 m.

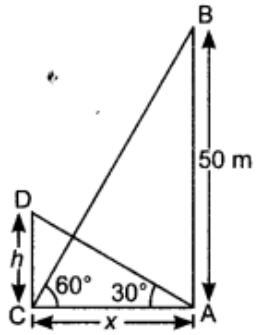


In $\Delta BAC$, $\frac{AB}{AC} = \tan 60° \Rightarrow \frac{50}{x} = \sqrt{3}$

$\Rightarrow \quad x = \frac{50}{\sqrt{3}}$ ...(*i*)

In $\Delta DCA$, $\frac{DC}{CA} = \tan 30°$

$\Rightarrow \quad \frac{h}{x} = \frac{1}{\sqrt{3}}$

$\Rightarrow \quad h = \frac{x}{\sqrt{3}} = \frac{1}{\sqrt{3}} \times \frac{50}{\sqrt{3}} = \frac{50}{3} = 16.67$ m [From (*i*)]

**Question 55.**

**A straight highway leads to the foot of a tower. A man standing at the top of the tower observes a car at an angle of depression of 30°, which is approaching the foot of the tower with a uniform speed. 10 seconds later, the angle of depression of the car is found to be 60°. Find the time taken by the car to reach the foot of the tower from this point.**

**Solution:**

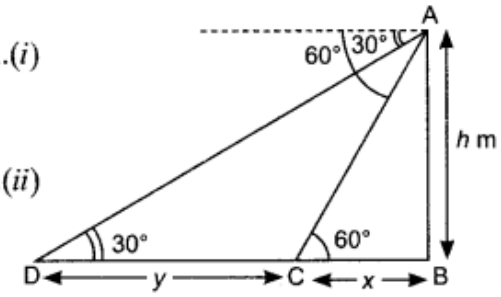


In $\Delta ABC$, $\frac{AB}{BC} = \tan 60° \Rightarrow \frac{h}{x} = \sqrt{3}$

$\Rightarrow \quad h = \sqrt{3}x$ ...(*i*)

In $\Delta ABD$, $\frac{AB}{BD} = \tan 30°$

$\Rightarrow \quad \frac{h}{x+y} = \frac{1}{\sqrt{3}} \Rightarrow h = \frac{x+y}{\sqrt{3}}$ ...(*ii*)

From (*i*) and (*ii*), we get

$$\sqrt{3}x = \frac{x+y}{\sqrt{3}}$$

$\Rightarrow \quad 3x = x + y \Rightarrow 2x = y \Rightarrow x = \frac{y}{2}$

It is given that car covers a distance of $y$ in 10 seconds. So, in order to cover the distance $x = \frac{y}{2}$, car will take 5 seconds. So, total time taken by the car to reach the foot of the tower is 15 seconds.

**Question 56.**

**The shadow of a tower standing on a level ground is found to be 30 m longer when the sun's altitude is 30° than when it is 60°. Find the height of the tower.**

**Solution:**

Let AB be the tower of height $h$.

Let BC = $x$

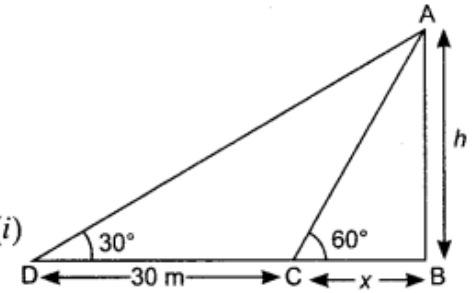


In $\Delta ABC$, $\frac{AB}{BC} = \tan 60°$

$\Rightarrow \frac{h}{x} = \sqrt{3}$

$\Rightarrow x = \frac{h}{\sqrt{3}}$ ...(i)

In $\Delta ABD$, $\frac{AB}{BD} = \tan 30°$

$\Rightarrow \frac{h}{x+30} = \frac{1}{\sqrt{3}}$

$\Rightarrow h\sqrt{3} = x + 30$

$\Rightarrow h\sqrt{3} = \frac{h}{\sqrt{3}} + 30$ [From (i)]

$\Rightarrow h\sqrt{3} = \frac{h + 30\sqrt{3}}{\sqrt{3}} \Rightarrow 3h = h + 30\sqrt{3}$

$\Rightarrow 2h = 30\sqrt{3} \Rightarrow h = 15\sqrt{3}$ m

Hence, the height of the tower is $15\sqrt{3}$ m.

**Question 57.**

A man standing on the bank of a river observes that the angle of elevation of the top of a tree standing on the opposite bank is 60°. When he moves 40 metres away from the bank, he finds the angle of elevation to be 30°. Find the height of the tree.

**Solution:**

Let $h$ be the height of the tree AB.

Let BC = $x$

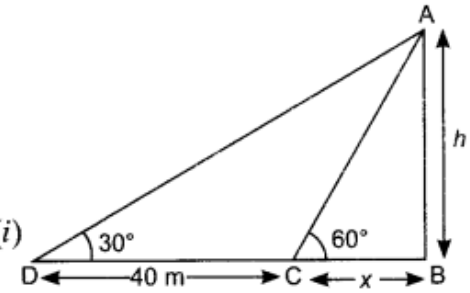


In $\Delta ABC$, $\frac{AB}{BC} = \tan 60°$

$\Rightarrow \frac{h}{x} = \sqrt{3}$

$\Rightarrow x = \frac{h}{\sqrt{3}}$ ...(i)

In $\Delta ABD$, $\frac{AB}{BD} = \tan 30°$

$\Rightarrow \frac{h}{40+x} = \frac{1}{\sqrt{3}} \Rightarrow h\sqrt{3} = 40 + x$

$\Rightarrow h\sqrt{3} = 40 + \frac{h}{\sqrt{3}}$ [Using (i)]

$\Rightarrow 3h = 40\sqrt{3} + h \Rightarrow 2h = 40\sqrt{3} \Rightarrow h = 20\sqrt{3}$ m

Hence, the height of the tree is $20\sqrt{3}$ m.

## 2010

## Long Answer Type Questions [4 Marks]

**Question 58.**

From the top of a 7 m high building, the angle of elevation of the top of a tower is 60°

and the angle of depression of the foot of the tower is 30°. Find the height of the tower

**Solution:**

AB is a building of height 7 m and CD is a tower of height $h$.

Here, $AB = ED = 7$ m and $CE = h - 7$

Let $BD = AE = x$

In right $\Delta AED$, $\frac{AE}{ED} = \cot 30°$

$\Rightarrow \frac{x}{7} = \sqrt{3}$

$\Rightarrow x = 7\sqrt{3}$ m ...(i)

In right $\Delta AEC$, $\frac{CE}{AE} = \tan 60° \Rightarrow \frac{CE}{x} = \sqrt{3}$

$\Rightarrow \frac{h-7}{7\sqrt{3}} = \sqrt{3} \Rightarrow h - 7 = 7 \times 3$ [From (i)]

$\Rightarrow h - 7 = 21 \Rightarrow h = 28$ m

$\therefore$ Height of the tower is 28 m.

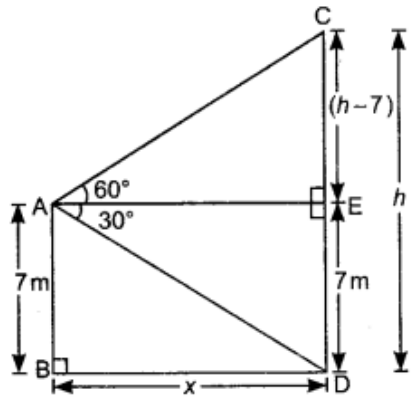


**Question 59.**

The angle of elevation of a cloud from a point 60 m above a lake is 30° and the angle of depression of the reflection of the cloud in the lake is 60°. Find the height of the cloud from the surface of the lake.

**Solution:**

Let height of the cloud C from the lake be $h$. A is position of the point 60 m above the lake. D is the reflection of the cloud in lake. Then, $FC = FD = h$

$\Rightarrow CE = h - 60$ and $DE = 60 + h$

In right $\Delta AEC$, $\frac{AE}{EC} = \cot 30°$

$\Rightarrow AE = (h - 60)\sqrt{3}$ ...(i)

In right $\Delta AED$, $\frac{AE}{ED} = \cot 60°$

$\Rightarrow AE = \frac{h+60}{\sqrt{3}}$ ...(ii)

From (i) and (ii), we get

$$(h - 60)\sqrt{3} = \frac{h+60}{\sqrt{3}}$$

$\Rightarrow 3h - 180 = h + 60$

$\Rightarrow 2h = 240 \Rightarrow h = 120$ m

$\therefore$ Height of the cloud above the lake is 120 m.

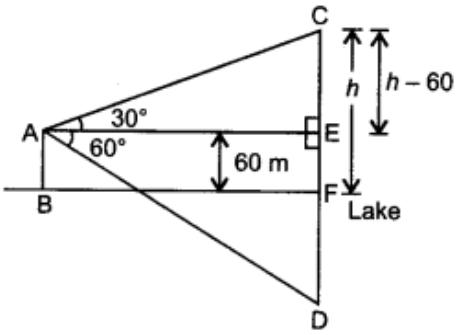


**Question 60.**

A man on the deck of a ship, 12 m above water level, observes that the angle of elevation of the top of a cliff is 60° and the angle of depression of the base of the cliff is 30°. Find the distance of the cliff from the ship and the height of the cliff.

**Solution:**

Let ED be the deck of the ship of height 12 m.

AC be the cliff of height $x + 12$

$\angle AEB = 60°$, $\angle CEB = 30°$

Let distance between the cliff and the deck be $y$.

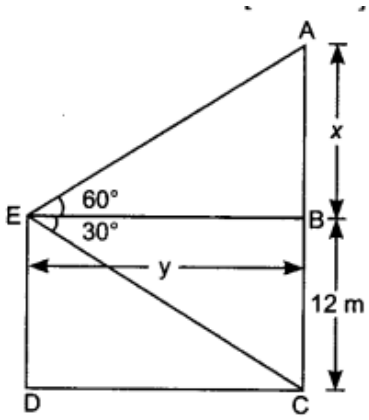


In $\Delta CBE$, $\frac{CB}{BE} = \tan 30° \Rightarrow \frac{12}{y} = \frac{1}{\sqrt{3}}$

$\Rightarrow$ $y = 12\sqrt{3} = 12 \times 1.732 = 20.784$ m

In $\Delta ABE$, $\frac{AB}{BE} = \tan 60° \Rightarrow \frac{x}{y} = \sqrt{3}$

$\Rightarrow$ $\frac{x}{12\sqrt{3}} = \sqrt{3}$ $(\because y = 12\sqrt{3})$

$\Rightarrow$ $x = \sqrt{3} \times 12\sqrt{3} \Rightarrow x = 36$ m

Distance of the cliff from the ship is 20.784 m.

Height of the cliff $= x + 12 = 36 + 12 = 48$ m.

**Question 61.**

A vertical pedestal stands on the ground and is surmounted by a vertical flagstaff of height 5 m. At a point on the ground, the angles of elevation of the bottom and the top of the flagstaff are 30° and 60° respectively. Find the height of the pedestal.

**Solution:**

Let height of pedestal AB $= h$ m.

BC is vertical flagstaff of height 5 m.

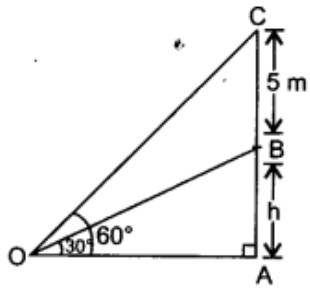


$\angle BOA = 30°$, $\angle COA = 60°$

In right $\Delta BAO$, $\frac{OA}{AB} = \cot 30°$

$\Rightarrow$ $OA = \sqrt{3}h$ ...(*i*)

In right $\Delta CAO$, $\frac{OA}{AC} = \cot 60°$

$\Rightarrow$ $OA = \frac{h+5}{\sqrt{3}}$ ...(*ii*)

From (*i*) and (*ii*), we get

$\sqrt{3}h = \frac{h+5}{\sqrt{3}} \Rightarrow 3h = h + 5$

$\Rightarrow$ $2h = 5 \Rightarrow h = 2.5$ m

$\therefore$ Height of the pedestal is 2.5 m.

**Question 62.**

From a window (9 m above the ground) of a house in a street, the angles of elevation and depression of the top and foot of another house on the opposite side of the street are 30° and 60° respectively. Find the height of the opposite house and the width of the street

**Solution:**

Let ED be the window of height 9 m and AC be house of height $x + 9$. DC is the street of width $y$.

Here, $\angle AEB = 30°$ and $\angle CEB = 60°$

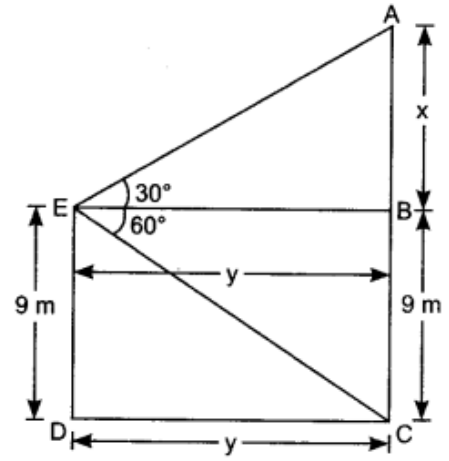


In $\Delta CBE$, $\frac{CB}{BE} = \tan 60°$

$\Rightarrow \quad \frac{9}{y} = \sqrt{3}$

$\Rightarrow \quad y = \frac{9}{\sqrt{3}} = \frac{9}{\sqrt{3}} \times \frac{\sqrt{3}}{\sqrt{3}}$

$= \frac{9\sqrt{3}}{3} = 3\sqrt{3}\text{ m}$ ...(*i*)

In $\Delta ABE$, $\frac{AB}{BE} = \tan 30° \Rightarrow \frac{x}{y} = \frac{1}{\sqrt{3}}$

$\Rightarrow \quad \frac{x}{3\sqrt{3}} = \frac{1}{\sqrt{3}}$ [From (*i*)]

$x = 3\text{ m}$

Height of the house $= x + 9 = 3 + 9 = 12$ m

Width of the street $= 3\sqrt{3} = 3 \times 1.732 = 5.196$ m